Prepared by: Zach Perkovich
10/01/2025

Pritchard Auto Company | 980 Highway 18 East Britt Iowa | 504238700

2026 F-550 Chassis 4x4 SD Regular Cab 169" WB DRW XL (F5H)

Price Level: 630 | Quote ID: 26VL017

As Configured Vehicle

Code	Description	MSRP
Base Vehicle		
F5H	Base Vehicle Price (F5H)	$59,795.00
Packages		
660A	Order Code 660A *Includes:* *- Engine: 7.3L 2V DEVCT NA PFI V8 Gas* *- 190 Amp Alternator* *- Transmission: TorqShift 10-Speed Automatic* *Includes SelectShift, selectable drive modes: normal, tow/haul, eco, slippery roads and off-road and transmission power take-off provision.* *- Tires: 225/70Rx19.5G BSW A/P* *- Wheels: 19.5" x 6" Argent Painted Steel* *Hub covers/center ornaments not included.* *- HD Vinyl 40/20/40 Split Bench Seat* *Includes center armrest, cupholder, storage, 2-way adjustable driver/passenger headrests and driver's side manual lumbar.* *- Radio: AM/FM Stereo w/MP3 Player* *Includes 4 speakers.* *- SYNC 4 Communication & Entertainment System* *Includes enhanced voice recognition, 911 Assist, 8" center display, AppLink and 1 smart-charging USB port.* *- Ford Connectivity Package (1-Year Included)* *Includes unlimited Wi-Fi hotspot. Included for 1-year from warranty start date. Requires activation via Ford app with credit card authorization; customer may cancel at any time. Evolving technology/cellular networks/vehicle capability may limit functionality and prevent operation of connected features. Ford may temporarily slow data speeds if such data usage reaches or exceeds 50GB within a billing cycle or due to network limitations. If a customer uses more than 50% of their data usage in a roaming country during a 60-day period, Ford may remove or limit the customer's data plan.*	N/C
Powertrain		
99N	Engine: 7.3L 2V DEVCT NA PFI V8 Gas *Includes:* *- 190 Amp Alternator*	Included
44G	Transmission: TorqShift 10-Speed Automatic *Includes SelectShift, selectable drive modes: normal, tow/haul, eco, slippery roads and off-road and transmission power take-off provision.*	Included
X8L	Limited Slip w/4.88 Axle Ratio	$395.00
68H	GVWR: 19,550 lb Payload Plus Upgrade Package 2 *Includes upgraded frame, upgraded rear-axle and low deflection/high capacity rear springs. Increases max RGAWR to 14,706 lbs. Note: See Order Guide Supplemental Reference for further details on GVWR.*	$1,155.00

Prices and content availability as shown are subject to change and should be treated as estimates only. Actual base vehicle, package and option pricing may vary from this estimate because of special local pricing, availability or pricing adjustments not reflected in the dealer's computer system. See salesperson for the most current information.

2026 F-550 Chassis 4x4 SD Regular Cab 169" WB DRW XL (F5H)

Price Level: 630 | Quote ID: 26VL017

As Configured Vehicle (cont'd)

Code	Description	MSRP
Wheels & Tires		
TGJ	Tires: 225/70Rx19.5G BSW A/P	Included
64Z	Wheels: 19.5" x 6" Argent Painted Steel *Hub covers/center ornaments not included.*	Included
Seats & Seat Trim		
A	HD Vinyl 40/20/40 Split Bench Seat *Includes center armrest, cupholder, storage, 2-way adjustable driver/passenger headrests and driver's side manual lumbar.*	Included
Other Options		
PAINT	Monotone Paint Application	STD
169WB	169" Wheelbase	STD
STDRD	Radio: AM/FM Stereo w/MP3 Player *Includes 4 speakers.* *Includes:* *- SYNC 4 Communication & Entertainment System* *Includes enhanced voice recognition, 911 Assist, 8" center display, AppLink and 1 smart-charging USB port.* *- Ford Connectivity Package (1-Year Included)* *Includes unlimited Wi-Fi hotspot. Included for 1-year from warranty start date. Requires activation via Ford app with credit card authorization; customer may cancel at any time. Evolving technology/cellular networks/vehicle capability may limit functionality and prevent operation of connected features. Ford may temporarily slow data speeds if such data usage reaches or exceeds 50GB within a billing cycle or due to network limitations. If a customer uses more than 50% of their data usage in a roaming country during a 60-day period, Ford may remove or limit the customer's data plan.*	Included
67P	Extra Heavy-Duty Front End Suspension - 7,500 GAWR *Includes upgraded front axle and max 7,500 lbs. Front springs/GAWR rating for configuration selected. Incomplete vehicle package - requires further manufacture and certification by a final stage manufacturer.*	$285.00
60X	Automated Emergency Braking (AEB) Removal *Removes Pre-Collision Assist with Automated Emergency Barking (AEB) and forward collision warning, auto high beams, post impact braking and audible lane departure warning.*	N/C
18A	Vehicle Integration System 2.0 FIN code required to program the module. *Includes programmable vehicle integration system. Recommended for trucks that will utilize upfit aftermarket equipment.*	$400.00

Prices and content availability as shown are subject to change and should be treated as estimates only. Actual base vehicle, package and option pricing may vary from this estimate because of special local pricing, availability or pricing adjustments not reflected in the dealer's computer system. See salesperson for the most current information.

2026 F-550 Chassis 4x4 SD Regular Cab 169" WB DRW XL (F5H)

Price Level: 630 | Quote ID: 26VL017

As Configured Vehicle (cont'd)

Code	Description	MSRP
18B	Platform Running Boards	$320.00
872	Rear View Camera & Prep Kit *Pre-installed content includes cab wiring and frame wiring to the rear most cross member. Upfitters kit includes camera with mounting bracket, 20' jumper wire and camera mounting/aiming instructions.*	$515.00
Fleet Options		
WARANT	Fleet Customer Powertrain Limited Warranty Requires valid FIN code. *Ford is increasing the 5-year 60,000-mile limited powertrain warranty to 5-years, 100,000 miles. Only Fleet purchasers with a valid Fleet Identification Number (FIN code) will receive the extended warranty. When the sale is entered into the sales reporting system with a sales type fleet along with a valid FIN code, the warranty extension will automatically be added to the vehicle. The extension will stay with the vehicle even if it is subsequently sold to a non-fleet customer before the expiration. This extension applies to both gas and diesel powertrains. Dealers can check for the warranty extension on eligible fleet vehicles in OASIS. Please refer to the Warranty and Policy Manual section 3.13.00 Gas Engine Commercial Warranty. This change will also be reflected in the printed Warranty Guided distributed with the purchase of every new vehicle.*	N/C
Emissions		
425	50-State Emissions System	STD
Exterior Color		
Z1_01	Oxford White	N/C
Interior Color		
AS_03	Medium Dark Slate w/HD Vinyl 40/20/40 Split Bench Seat	N/C

SUBTOTAL	$62,865.00
Destination Charge	$2,595.00
TOTAL	$65,460.00

Prices and content availability as shown are subject to change and should be treated as estimates only. Actual base vehicle, package and option pricing may vary from this estimate because of special local pricing, availability or pricing adjustments not reflected in the dealer's computer system. See salesperson for the most current information.

2026 F-550 Chassis 4x4 SD Regular Cab 169" WB DRW XL (F5H)

Price Level: 630 | Quote ID: 26VL017

Selected Equip & Specs

Dimensions

- Conventional Capacity: 18,500 lbs.
- GCWR: 30,000 lbs.
- * **Fifth-wheel towing capacity: 21,300 lbs.**
- * **Gooseneck towing capacity: 21,500 lbs.**
- Front brake diameter: 15.4"
- Rear brake diameter: 15.8"
- Vehicle body length: 254.8"
- Vehicle body width: 80.0"
- Vehicle body height: 82.4"
- Wheelbase: 169.0"
- Vehicle turning radius: 24.2'
- Front track: 74.8"
- Rear track: 74.0"
- Cab to axle: 84.0"
- Rear tire outside width: 93.9"
- Axle to end of frame: 47.2"
- Frame section modulus: 12.7 cu.in.
- Frame yield strength (psi): 50000.0
- Frame rail width: 34.2"
- Front bumper to front axle: 38.3"
- Front bumper to back of cab: 123.7"
- Interior rear cargo volume: 11.6 cu.ft.
- Max interior rear cargo volume: 11.6 cu.ft.
- Total passenger volume: 64.6 cu.ft.
- Headroom first-row: 40.8"
- Leg room first-row: 43.9"
- Shoulder room first-row: 66.7"
- Hip room first-row: 62.5"

Powertrain

- Spark ignition system
- 7.3L V-8 DEVCT variable valve control, engine with 335HP
- Engine cylinders: V-8
- Injection Type: sequential MPI
- Horsepower: 335 HP@3750 RPM
- Torque: 468 lb.-ft.@3750 RPM
- Radiator
- Auxiliary power take-off
- 10-speed automatic
- Part-time 4WD
- Four-wheel drive
- Recommended fuel: regular unleaded
- Driveline managed traction control
- Electronic transfer case shift
- * **Mechanical limited slip differential**
- Auto locking hub control

Fuel Economy and Emissions

- Gasoline secondary fuel type
- Federal emissions

Suspension and Handling

- Firm ride suspension
- Heavy-duty front shock absorbers
- Heavy-duty rear shock absorbers

Driveability

- 4-wheel disc brakes
- Front and rear ventilated disc brakes
- 4-wheel antilock (ABS) brakes
- Four channel ABS brakes
- Brake assist system
- Hill Start Assist
- Mono-beam rigid axle front suspension
- Front anti-roll bar
- Front coil springs
- * **Rigid axle rear suspension**

Prices and content availability as shown are subject to change and should be treated as estimates only. Actual base vehicle, package and option pricing may vary from this estimate because of special local pricing, availability or pricing adjustments not reflected in the dealer's computer system. See salesperson for the most current information.

2026 F-550 Chassis 4x4 SD Regular Cab 169" WB DRW XL (F5H)

Price Level: 630 | Quote ID: 26VL017

Selected Equip & Specs (cont'd)

- Rear anti-roll bar
- Hydraulic power-assist steering system
- 2-wheel steering system
- Leaf spring rear suspension
- Re-circulating ball steering

Body Exterior

- Trailer wiring harness
- 2 doors
- Black fender flares
- Black door handles
- Black front bumper
- Black front bumper rub strip
- Convex spotter in driver and passenger side door mirrors
- Turn signal indicator in door mirrors
- LT225/70RS19.5 AS BSW front and rear tires
- * **Running boards**
- Monotone paint
- Black side window trim
- Black windshield trim
- 2 front tow hooks
- Black grille
- Manual extendable trailer mirrors
- Black door mirrors
- 19.5 x 6-inch front and dual rear argent steel wheels

Convenience

- Power door locks with 2 stage unlocking
- All-in-one remote fob and ignition key
- Cruise control with steering wheel mounted controls
- Power first-row windows
- Front beverage holders
- 6 beverage holders
- Instrument panel covered bin
- Retained accessory power
- Upfitter switches
- PRND in IP
- Keyfob activated door locks
- Auto-locking doors
- Day/Night rearview mirror
- Fixed rear windshield
- Illuminated locking glove box
- Illuminated glove box
- Dashboard storage
- Trip computer
- Over the air updates

Comfort

- Manual climate control
- Cloth headliner material
- Full vinyl floor covering
- Urethane steering wheel
- Manual telescopic steering wheel
- Cabin air filter
- Full headliner coverage
- Full floor coverage
- Manual tilting steering wheel

Seats and Trim

- Seating capacity: 3
- Driver seat with 4-way directional controls
- Height adjustable front seat head restraints
- Split-bench front seat
- Front seat armrest storage
- 40-20-40 split-bench front seat
- Front passenger seat with 4-way directional controls
- Manual front seat head restraint control
- Front seat center armrest
- Manual reclining driver seat

Prices and content availability as shown are subject to change and should be treated as estimates only. Actual base vehicle, package and option pricing may vary from this estimate because of special local pricing, availability or pricing adjustments not reflected in the dealer's computer system. See salesperson for the most current information.

2026 F-550 Chassis 4x4 SD Regular Cab 169" WB DRW XL (F5H)

Price Level: 630 | Quote ID: 26VL017

Selected Equip & Specs (cont'd)

- Manual driver seat fore/aft control
- Manual passenger seat fore/aft control
- Vinyl front seat upholstery
- Manual reclining passenger seat
- Manual driver seat lumbar

Entertainment Features

- 2 total number of 1st row displays
- Primary touchscreen display
- AM/FM
- AM radio
- Seek scan
- Standard grade speakers
- Steering wheel mounted audio controls
- Speed sensitive volume
- Fixed audio antenna
- 8 inch primary display
- AM/FM stereo radio
- In-vehicle audio
- FM radio
- SYNC 4 external memory control
- Speakers number: 4
- SYNC 4 voice activated audio controls
- Wireless audio streaming

Lighting, Visibility and Instrumentation

- Digital/analog instrumentation display
- Trip odometer
- Compass
- Driver information center
- Oil pressure gauge
- Transmission fluid temperature gauge
- Gauge cluster display size (inches): 4.20
- Reflector headlights
- Autolamp auto on/off headlight control
- Delay-off headlights
- Variable intermittent front windshield wipers
- Front reading lights
- Daytime running lights
- Remote activated perimeter approach lighting
- Configurable instrumentation gauges
- Digital clock
- Exterior temperature display
- Tachometer
- Engine/electric motor temperature gauge
- Engine hour meter
- Light tinted windows
- Halogen headlights
- Multiple enclosed headlights
- DRL preference setting
- Illuminated entry
- Variable instrument panel light
- Cab clearance lights
- Fade interior courtesy lights

Technology and Telematics

- SYNC 4 911 Assist emergency SOS system via mobile device
- Smart device wireless mirroring
- 5G Modem - Ford Connectivity Package mobile hotspot internet access
- SYNC 4 handsfree wireless device connectivity
- Ford App mobile app access
- 2 USB ports

Safety and Security

- Driver front impact airbag
- Safety Canopy System curtain first-row overhead airbags
- Seat mounted side impact driver airbag
- Cancellable front passenger air bag

Prices and content availability as shown are subject to change and should be treated as estimates only. Actual base vehicle, package and option pricing may vary from this estimate because of special local pricing, availability or pricing adjustments not reflected in the dealer's computer system. See salesperson for the most current information.

2026 F-550 Chassis 4x4 SD Regular Cab 169" WB DRW XL (F5H)

Price Level: 630 | Quote ID: 26VL017

Selected Equip & Specs (cont'd)

- Seat mounted side impact front passenger airbag
- Front height adjustable seatbelts
- Ford Security Package (1-year included with activation) security system
- 6 airbags
- SecuriLock immobilizer
- Remote panic alarm

* **Rear mounted camera**

Dimensions

General Weights

Curb weight	6,996 lbs.	Rear curb weight	2,976 lbs.
* **GVWR**	**19,550 lbs.**	* **Payload**	**12,340 lbs.**

Trailering Weights

* **Fifth-wheel towing capacity**	**21,300 lbs.**	* **Gooseneck towing capacity**	**21,500 lbs.**
Conventional capacity	18,500 lbs.	GCWR	30,000 lbs.

Front Weights

Front curb weight	4,020 lbs.	* **GAWR front**	**7,500 lbs.**
* **Axle capacity front**	**7,500 lbs.**	* **Spring rating front**	**7,500 lbs.**
Tire/wheel capacity front	7,500 lbs.		

Rear Weights

* **GAWR rear**	**14,706 lbs.**	* **Axle capacity rear**	**14,706 lbs.**
* **Spring rating rear**	**14,706 lbs.**	Tire/wheel capacity rear	15,000 lbs.

Off Road

Min ground clearance	8.6"

Exterior Measurements

Vehicle body length	254.8"	Vehicle body width	80.0"
Vehicle body height	82.4"	Wheelbase	169.0"
Front brake diameter	15.4"	Rear brake diameter	15.8"
Rear frame height loaded	28.6"	Rear frame height unloaded	34.5"
Front track	74.8"	Rear track	74.0"
Vehicle turning radius	24.2'	Cab to axle	84.0"
Rear tire outside width	93.9"	Axle to end of frame	47.2"
Frame section modulus	12.7 cu.in.	Frame yield strength (psi)	50000.0
Frame rail width	34.2"	Front bumper to front axle	38.3"
Front bumper to back of cab	123.7"		

Interior Measurements

Interior rear cargo volume	11.6 cu.ft.	Max interior rear cargo volume	11.6 cu.ft.

Interior Volume

Prices and content availability as shown are subject to change and should be treated as estimates only. Actual base vehicle, package and option pricing may vary from this estimate because of special local pricing, availability or pricing adjustments not reflected in the dealer's computer system. See salesperson for the most current information.

2026 F-550 Chassis 4x4 SD Regular Cab 169" WB DRW XL (F5H)

Price Level: 630 | Quote ID: 26VL017

Selected Equip & Specs (cont'd)

Total passenger volume ..... 64.6 cu.ft.

Headroom

Headroom first-row ..... 40.8"

Legroom

Leg room first-row ..... 43.9"

Shoulder Room

Shoulder room first-row ..... 66.7"

Hip Room

Hip room first-row ..... 62.5"

Powertrain

Engine

Engine ..... 7.3L V-8 DEVCT variable valve control, engine with 335HP
Valves per cylinder 2
Engine cylinders V-8
Injection type ..... sequential MPI
Engine location ..... Front mounted engine
Ignition ..... Spark ignition system
Engine mounting direction ..... Longitudinal mounted engine
Engine block material ..... Iron engine block
Cylinder head material ..... Aluminum cylinder head

Engine Specs

Displacement 7.3L
cc ..... 445 cu.in.
Bore ..... 4.21"
Stroke ..... 3.98"
Compression ratio 10.5
SAEJ1349 ..... AUG2004 compliant

Engine Power

Horsepower ..... 335 HP@3750 RPM
Torque ..... 468 lb.-ft.@3750 RPM

Alternator

Alternator amps 190A
Alternator type ..... Regular duty alternator

Battery

Battery amps 68Ah
Battery type ..... HD lead acid battery
Battery rating 750CCA
Battery run down protection ..... Battery run down protection

Engine Extras

Radiator ..... Radiator
Auxiliary power take-off ..... Auxiliary power take-off

Transmission

Transmission ..... 10-speed automatic
Transmission electronic control ..... Transmission electronic control
Overdrive transmission ..... Overdrive transmission
Lock-up transmission ..... Lock-up transmission

Prices and content availability as shown are subject to change and should be treated as estimates only. Actual base vehicle, package and option pricing may vary from this estimate because of special local pricing, availability or pricing adjustments not reflected in the dealer's computer system. See salesperson for the most current information.

2026 F-550 Chassis 4x4 SD Regular Cab 169" WB DRW XL (F5H)

Price Level: 630 | Quote ID: 26VL017

Selected Equip & Specs (cont'd)

First gear ratio	4.615	Second gear ratio	2.919
Third gear ratio	2.132	Fourth gear ratio	1.773
Fifth gear ratio	1.519	Sixth gear ratio	1.277
Reverse gear ratio	4.695	Seventh gear ratio	1
Eighth gear ratio	0.851	Ninth gear ratio	0.687
Tenth gear ratio	0.632	Stall ratio	1.97
Selectable mode transmission	Selectable mode transmission	Sequential shift control	SelectShift Sequential shift control
Transmission oil cooler	Transmission oil cooler	PTO transmission provision	PTO transmission provision

Drive Type

4WD type	Part-time 4WD	Drive type	Four-wheel drive

Drivetrain

Axle ratio	4.88

Exhaust

Tailpipe	Stainless steel single exhaust

Fuel

Fuel type	regular unleaded

Fuel Tank

Fuel tank capacity	40.00 gal.

Drive Feature

* **Limited slip differential**	**Mechanical limited slip differential**	Traction control	Driveline managed traction control
Locking hub control	Auto locking hub control	Transfer case	Electronic transfer case shift

Fuel Economy and Emissions

Fuel Economy

Secondary fuel type	Gasoline secondary fuel type

Emissions

Emissions	Federal emissions

Suspension and Handling

Suspension

Suspension	Firm ride suspension	Front shock absorbers	Heavy-duty front shock absorbers
Rear shock absorbers	Heavy-duty rear shock absorbers		

Prices and content availability as shown are subject to change and should be treated as estimates only. Actual base vehicle, package and option pricing may vary from this estimate because of special local pricing, availability or pricing adjustments not reflected in the dealer's computer system. See salesperson for the most current information.

2026 F-550 Chassis 4x4 SD Regular Cab 169" WB DRW XL (F5H)

Price Level: 630 | Quote ID: 26VL017

Selected Equip & Specs (cont'd)

Driveability

Brakes

Brake type	4-wheel disc brakes	Ventilated brakes	Front and rear ventilated disc brakes
ABS brakes	Four channel ABS brakes	ABS brakes	4-wheel antilock (ABS) brakes

Brake Assistance

Hill start assist	Hill Start Assist	Brake assist system	Brake assist system

Front Suspension

Front anti-roll	Front anti-roll bar	Suspension ride type front	Mono-beam rigid axle front suspension

Front Spring

* **HD front springs**	**Heavy-duty front springs**	Springs front	Front coil springs

Rear Spring

Springs rear	Rear leaf springs	Rear springs	Heavy-duty rear springs

Rear Suspension

Rear anti-roll	Rear anti-roll bar	Suspension type rear	Leaf spring rear suspension
* **Suspension ride type rear**	**Rigid axle rear suspension**		

Steering

Steering	Hydraulic power-assist steering system	Steering type	Re-circulating ball steering
Steering type number of wheels	2-wheel steering system		

Exterior

Front Wheels

Front wheels diameter	19.5"	Front wheels width	6"

Rear Wheels

Rear wheels diameter	19.5"	Rear wheels width	6"

Front And Rear Wheels

Appearance	argent	Material	steel

Front Tires

Aspect	70	Diameter	19.5"
Sidewalls	BSW	Speed	S
Tread	AS	Type	LT
Width	225mm	Front wheel - RPM	647

Prices and content availability as shown are subject to change and should be treated as estimates only. Actual base vehicle, package and option pricing may vary from this estimate because of special local pricing, availability or pricing adjustments not reflected in the dealer's computer system. See salesperson for the most current information.

2026 F-550 Chassis 4x4 SD Regular Cab 169" WB DRW XL (F5H)

Price Level: 630 | Quote ID: 26VL017

Selected Equip & Specs (cont'd)

Rear Tires

Aspect	70	Diameter	19.5"
Sidewalls	BSW	Speed	S
Tread	AS	Type	LT
Width	225mm	Rear wheel - RPM	647

Body Exterior

Trailering

Towing wiring harness	Trailer wiring harness	Towing trailer sway	Trailer sway control

Exterior Features

Number of doors	2 doors	* **Running boards**	**Running boards**
Front splash guards	Front splash guards		

Body

Body panels	Aluminum body panels with side impact beams

Mirrors

Convex spotter	Convex spotter in driver and passenger side door mirrors	Turn signal in door mirrors	Turn signal indicator in door mirrors

Tires

Front tires LT load rating	G	Rear tires LT load rating	G

Wheels

Dual rear wheels	Dual rear wheels

Convenience

Door Locks

Door locks	Power door locks with 2 stage unlocking	Keyfob door locks	Keyfob activated door locks
All-in-one key	All-in-one remote fob and ignition key	Auto door locks	Auto-locking doors

Cruise Control

Cruise control	Cruise control with steering wheel mounted controls

Rear View Mirror

Day/Night rearview mirror	Day/Night rearview mirror

Exterior Mirrors

Door mirrors	Power door mirrors	Folding door mirrors	Manual folding door mirrors
Heated door mirrors	Heated driver and passenger side door mirrors		

Prices and content availability as shown are subject to change and should be treated as estimates only. Actual base vehicle, package and option pricing may vary from this estimate because of special local pricing, availability or pricing adjustments not reflected in the dealer's computer system. See salesperson for the most current information.

2026 F-550 Chassis 4x4 SD Regular Cab 169" WB DRW XL (F5H)

Price Level: 630 | Quote ID: 26VL017

Selected Equip & Specs (cont'd)

Front Side Windows

First-row windows ..... Power first-row windows

Overhead Console

Overhead console ..... Full overhead console
Overhead console storage ..... Overhead console storage

Passenger Visor

Visor passenger mirror ..... Passenger visor mirror

Power Outlets

12V power outlets ..... 2 12V power outlets

Rear Windshield

Rear windshield ..... Fixed rear windshield

Storage

Number of beverage holders ..... 6 beverage holders
Beverage holders ..... Front beverage holders
Glove box ..... Illuminated locking glove box
Illuminated glove box ..... Illuminated glove box
Instrument panel storage ..... Instrument panel covered bin
Dashboard storage ..... Dashboard storage

Windows Feature

One-touch up window ..... Driver and passenger one-touch up windows
One-touch down window ..... Driver and passenger one-touch down windows

Miscellaneous

Trip computer ..... Trip computer
PRND in IP ..... PRND in IP
Upfitter switches ..... Upfitter switches
Accessory power ..... Retained accessory power
Over the air updates ..... Over the air updates

Comfort

Climate Control

Climate control ..... Manual climate control
Cabin air filter ..... Cabin air filter

Headliner

Headliner material ..... Cloth headliner material
Headliner coverage ..... Full headliner coverage

Floor Trim

Floor covering ..... Full vinyl floor covering
Floor coverage ..... Full floor coverage

Steering Wheel

Steering wheel material ..... Urethane steering wheel
Steering wheel telescopic ..... Manual telescopic steering wheel
Steering wheel tilt ..... Manual tilting steering wheel

Seats and Trim

Prices and content availability as shown are subject to change and should be treated as estimates only. Actual base vehicle, package and option pricing may vary from this estimate because of special local pricing, availability or pricing adjustments not reflected in the dealer's computer system. See salesperson for the most current information.

Selected Equip & Specs (cont'd)

Seat Capacity

Seating capacity 3

Front Seats

Front seat type ..... Split-bench front seat
Driver seat direction Driver seat with 4-way directional controls
Driver seat fore/aft control Manual driver seat fore/aft control
Passenger seat direction Front passenger seat with 4-way directional controls
Split front seats ..... 40-20-40 split-bench front seat
Reclining passenger seat Manual reclining passenger seat
Passenger seat fore/aft control ..... Manual passenger seat fore/aft control
Front head restraints ..... Height adjustable front seat head restraints
Front head restraint control ..... Manual front seat head restraint control
Armrests front center ..... Front seat center armrest
Armrests front storage ..... Front seat armrest storage
Reclining driver seat ..... Manual reclining driver seat

Lumbar Seats

Driver lumbar ..... Manual driver seat lumbar

Front Seat Trim

Front seat upholstery ..... Vinyl front seat upholstery
Front seatback upholstery ..... Vinyl front seatback upholstery

Interior Accents

Interior accents ..... Chrome interior accents

Gearshifter Material

Gearshifter material ..... Urethane gear shifter material

Entertainment Features

Displays

Primary touchscreen display ..... Primary touchscreen display
Number of first-row displays 2 total number of 1st row displays
Primary display size ..... 8 inch primary display

Radio Features

External memory ..... SYNC 4 external memory control
Seek scan ..... Seek scan

Speakers

Speakers ..... Standard grade speakers
Speakers number 4

Audio Features

Steering mounted audio control ..... Steering wheel mounted audio controls
Speed sensitive volume ..... Speed sensitive volume

Prices and content availability as shown are subject to change and should be treated as estimates only. Actual base vehicle, package and option pricing may vary from this estimate because of special local pricing, availability or pricing adjustments not reflected in the dealer's computer system. See salesperson for the most current information.

2026 F-550 Chassis 4x4 SD Regular Cab 169" WB DRW XL (F5H)

Price Level: 630 | Quote ID: 26VL017

Selected Equip & Specs (cont'd)

Voice activated audio ... SYNC 4 voice activated audio controls
Wireless streaming ... Wireless audio streaming

Lighting, Visibility and Instrumentation

Instrumentation

Trip odometer ... Trip odometer
Instrumentation display ... Digital/analog instrumentation display
Configurable instrumentation gauges ... Configurable instrumentation gauges

Instrumentation Displays

Temperature display ... Exterior temperature display
Driver information center ... Driver information center
Clock ... Digital clock
Compass ... Compass

Instrumentation Gauges

Tachometer ... Tachometer
Oil pressure gauge ... Oil pressure gauge
Transmission temperature gauge ... Transmission fluid temperature gauge
Engine/electric motor temperature gauge ... Engine/electric motor temperature gauge
Gauge cluster display size (inches) ... 4.20
Engine hour meter ... Engine hour meter

Instrumentation Warnings

Engine temperature warning ... Engine temperature warning
Oil pressure warning ... Oil pressure warning
Low fuel warning ... Low fuel warning
Low brake fluid warning ... Low brake fluid warning
Battery charge warning ... Battery charge warning
Headlights on reminder ... Headlights on reminder
Key in vehicle warning ... Key in vehicle warning
Door ajar warning ... Door ajar warning
Service interval warning ... Service interval indicator
Low tire pressure warning ... Tire specific low air pressure warning

Glass

Tinted windows ... Light tinted windows

Headlights

Headlights ... Halogen headlights
Headlight type ... Reflector headlights
Auto headlights ... Autolamp auto on/off headlight control
Multiple headlights ... Multiple enclosed headlights
Delay off headlights ... Delay-off headlights
DRL preference setting ... DRL preference setting

Front Windshield

Wipers ... Variable intermittent front windshield wipers

Interior Lighting

Illuminated entry ... Illuminated entry
Variable panel light ... Variable instrument panel light
Front reading lights ... Front reading lights

Lights

Running lights ... Daytime running lights
Interior courtesy lights ... Fade interior courtesy lights

Prices and content availability as shown are subject to change and should be treated as estimates only. Actual base vehicle, package and option pricing may vary from this estimate because of special local pricing, availability or pricing adjustments not reflected in the dealer's computer system. See salesperson for the most current information.

2026 F-550 Chassis 4x4 SD Regular Cab 169" WB DRW XL (F5H)

Price Level: 630 | Quote ID: 26VL017

Selected Equip & Specs (cont'd)

Clearance lights ..... Cab clearance lights

Perimeter approach lighting ..... Remote activated perimeter approach lighting

Technology and Telematics

Connectivity

Handsfree ..... SYNC 4 handsfree wireless device connectivity

Emergency SOS SYNC 4 911 Assist emergency SOS system via mobile device

Smart device integration ..... Smart device wireless mirroring

Internet Access

Internet access ..... 5G Modem - Ford Connectivity Package mobile hotspot internet access

USB Ports

USB ports ..... 2 USB ports

Safety and Security

Airbags

Front impact airbag driver ... Driver front impact airbag

Front impact airbag passenger ..... Cancellable front passenger air bag

Front side impact airbag passenger .... Seat mounted side impact front passenger airbag

Number of airbags ..... 6 airbags

Front side impact airbag driver .... Seat mounted side impact driver airbag

Overhead airbags Safety Canopy System curtain first-row overhead airbags

Seatbelts

Height adjustable seatbelts .... Front height adjustable seatbelts

Security System

Immobilizer ..... SecuriLock immobilizer

Security system ..... Ford Security Package (1-year included with activation) security system

Remote panic alarm ..... Remote panic alarm

Cameras

* **Rear camera** ..... **Rear mounted camera**

Prices and content availability as shown are subject to change and should be treated as estimates only. Actual base vehicle, package and option pricing may vary from this estimate because of special local pricing, availability or pricing adjustments not reflected in the dealer's computer system. See salesperson for the most current information.

2026 F-550 Chassis 4x4 SD Regular Cab 169" WB DRW XL (F5H)

Price Level: 630 | Quote ID: 26VL017

Vehicle Dimension and Performance Summary

Performance predictions in this report represent an estimate of vehicle performance based on standard operating conditions. Variations in customer equipment, load configuration, ambient conditions, and/or operator driving techniques can cause significant variations in vehicle performance. These values are not representative of results that may be shown in actual dynamometer tests. This report should therefore be used as a guide for comparative vehicle performance.

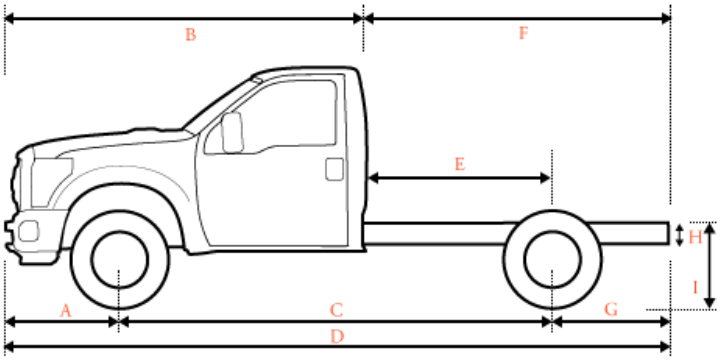

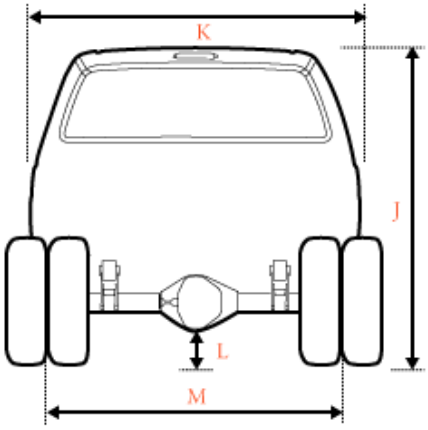

Dimensions

A	Front of Bumper to Front Axle	38.30 in.
B	Front Bumper to Back of Cab (BBC)	123.70 in.
C	Wheelbase (WB)	169.00 in.
D	Overall Length (OAL)	254.80 in.
E	Back of Cab to Rear Axle (CA)	84.00 in.
F	Back of Cab to End of Frame	131.20 in.
G	Rear Axle to End of Frame (AF)	47.20 in.
H	Frame Section Height	N/A
I	Rear Frame Height Unloaded	34.50 in.
I	Rear Frame Height Loaded	28.60 in.
J	Cab Height	82.40 in.
K	Body Width	80.00 in.
L	Maximum Ground Clearance	N/A
L	Minimum Ground Clearance	8.60 in.
M	Front Tread	74.80 in.
M	Rear Tread	74.00 in.

Prices and content availability as shown are subject to change and should be treated as estimates only. Actual base vehicle, package and option pricing may vary from this estimate because of special local pricing, availability or pricing adjustments not reflected in the dealer's computer system. See salesperson for the most current information.

2026 F-550 Chassis 4x4 SD Regular Cab 169" WB DRW XL (F5H)

Price Level: 630 | Quote ID: 26VL017

Vehicle Dimension and Performance Summary (cont'd)

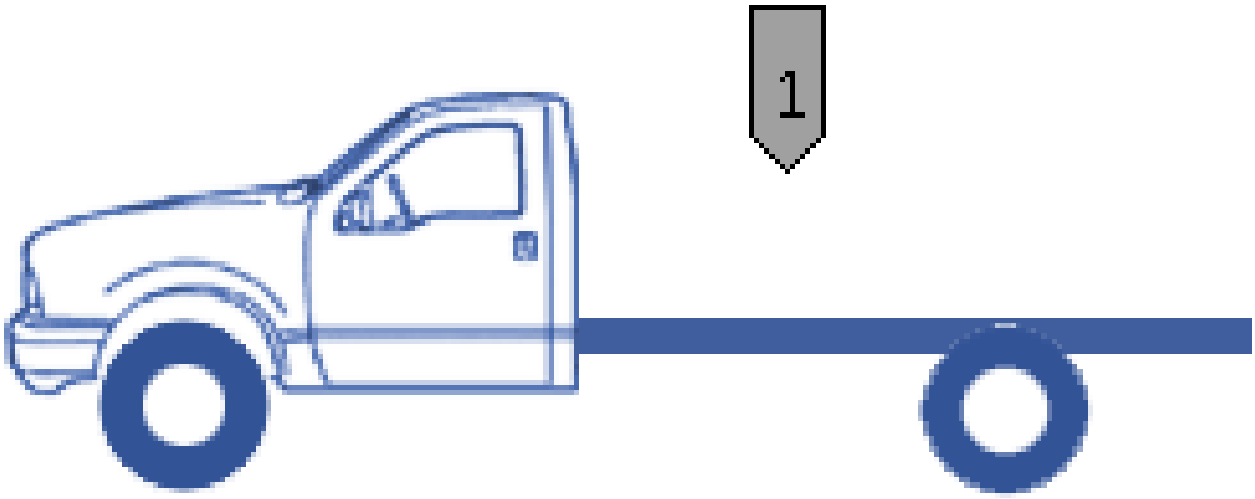

Weight

GVW	Front Axle	Rear Axle	Totals
Chassis	4,020 lbs	2,976 lbs	6,996 lbs
Body	0 lbs	0 lbs	0 lbs
Occupants Weight	300 lbs	150 lbs	450 lbs
1 Max Payload - (Max Payload)	3,180 lbs	11,580 lbs	14,760 lbs
TOTAL	**7,500 lbs**	**14,706 lbs**	**22,206 lbs**

Ratings	Front Axle	Rear Axle	GVWR
GAWR	**7,500 lbs**	**14,706 lbs**	**19,550 lbs**
Wheels/Tires	7,500 lbs	15,000 lbs	
Suspension	7,500 lbs	14,706 lbs	
Axle	7,500 lbs	14,706 lbs	
Legal Axle Limit	0 lbs	0 lbs	

Prices and content availability as shown are subject to change and should be treated as estimates only. Actual base vehicle, package and option pricing may vary from this estimate because of special local pricing, availability or pricing adjustments not reflected in the dealer's computer system. See salesperson for the most current information.

2026 F-550 Chassis 4x4 SD Regular Cab 169" WB DRW XL (F5H)

Price Level: 630 | Quote ID: 26VL017

Vehicle Dimension and Performance Summary (cont'd)

Start, Grade and Speed

Start	Ratio	Desired	Calculated
Start grade capability in 1st gear	4.62	15.00 %	32.11 %
Start grade capability in reverse	4.70	15.00 %	32.67 %

Grade	Ratio	Desired	Calculated
Maximum grade in 8th gear	0.85	3.00 %	6.01 %
Maximum grade in 9th gear	0.69	3.00 %	4.85 %
Maximum grade in 10th gear	0.63	3.00 %	4.46 %

Speed	Desired	Calculated
Top Speed (level grade)	75 mph	113 mph
To meet your requirement you need a maximum axle ratio of 8.80		
Top Speed on 3% grade	55 mph	
To meet your requirement you need a maximum of 123 hp		
Cruise Speed	60 mph	78 mph
Engine RPM at desired cruise speed		1,995 rpm

Variables in Use

Start

Rear axle ratio:	4.88	Clutch engagement torque:	234 ft.lbs.
Tire size:	225/70R19.5 (647 rev/mile)	Torque conversion ratio:	1.97
Gross Vehicle Weight (GVW):	19,550 lbs		

Grade

Rear axle ratio:	4.88	Gross Vehicle Weight (GVW):	19,550 lbs
Tire size:	225/70R19.5 (647 rev/mile)	Peak engine torque:	468 ft.lbs.

Speed

Engine Power:	335 hp @ 3,750 rpm	Worst road surface	Typical Highway
Peak Torque RPM:	3,750 rpm	Final Drive Ratio:	0.63
Frontal Area:	40.78 ft²	Drag Coefficient	0.80
Cruising RPM	2,600 rpm		

Prices and content availability as shown are subject to change and should be treated as estimates only. Actual base vehicle, package and option pricing may vary from this estimate because of special local pricing, availability or pricing adjustments not reflected in the dealer's computer system. See salesperson for the most current information.

2026 F-550 Chassis 4x4 SD Regular Cab 169" WB DRW XL (F5H)

Price Level: 630 | Quote ID: 26VL017

Vehicle Dimension and Performance Summary (cont'd)

Turning Radius

Turning Radius ..... 24.25 ft

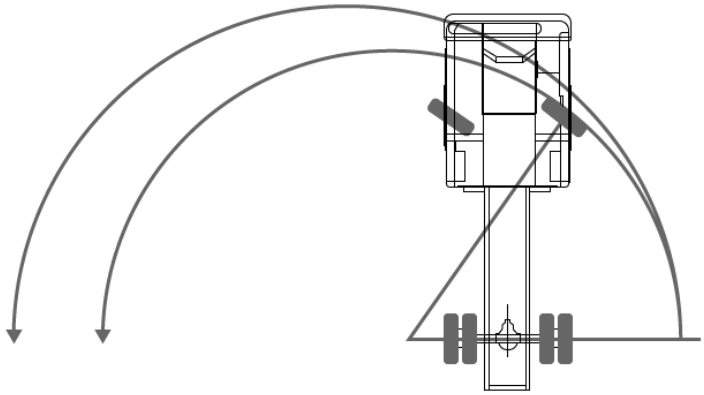

Prices and content availability as shown are subject to change and should be treated as estimates only. Actual base vehicle, package and option pricing may vary from this estimate because of special local pricing, availability or pricing adjustments not reflected in the dealer's computer system. See salesperson for the most current information.

2026 F-550 Chassis 4x4 SD Regular Cab 169" WB DRW XL (F5H)

Price Level: 630 | Quote ID: 26VL017

Warranty

Standard Warranty

Basic Warranty

Basic warranty	36 months/36,000 miles

Powertrain Warranty

Powertrain warranty	60 months/60,000 miles

Corrosion Perforation

Corrosion perforation warranty	60 months/unlimited

Roadside Assistance Warranty

Roadside warranty	60 months/60,000 miles

Prices and content availability as shown are subject to change and should be treated as estimates only. Actual base vehicle, package and option pricing may vary from this estimate because of special local pricing, availability or pricing adjustments not reflected in the dealer's computer system. See salesperson for the most current information.